Wallmount Instructions for Polycom® VVX® 300/310, 400/410, 500/600, and VVX® Expansion Modules

Instrucciones de montaje en pared para Polycom VVX 300/310, 400/410, 500/600, Expansion Modules | Wandaufbau-Anweisungen für die Polycom VVX 300/310, 400/410, 500/600, Expansion Modules | Montaggio a parete Istruzioni per l'Polycom VVX 300/310, 400/410, 500/600, Expansion Modules | 벽벽에 마운트에 대한 지침 Polycom VVX 300/310, 400/410, 500/600, Expansion Modules | 壁にマウントする手順について Polycom VVX 300/310, 400/410, 500/600, Expansion Modules | 壁掛指示 Polycom VVX 300/310, 400/410, 500/600, Expansion Modules | 为 Polycom VVX 300/310, 400/410, 500/600, Expansion Modules 壁式安装指示 | Instruções para montar o Polycom VVX 300/310, 400/410, 500/600, Expansion Modules na parede | Support Murals pour le Polycom VVX 300/310, 400/410, 500/600, Expansion Modules

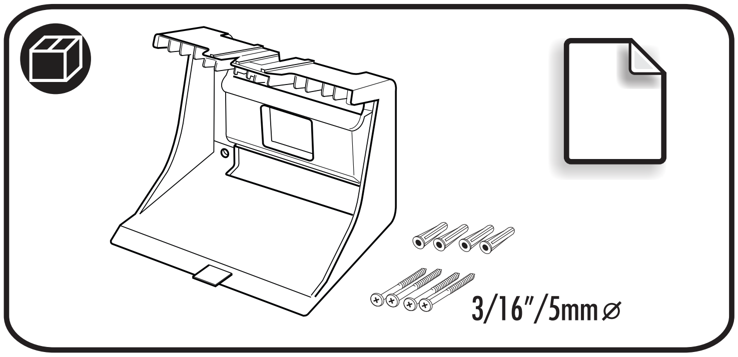

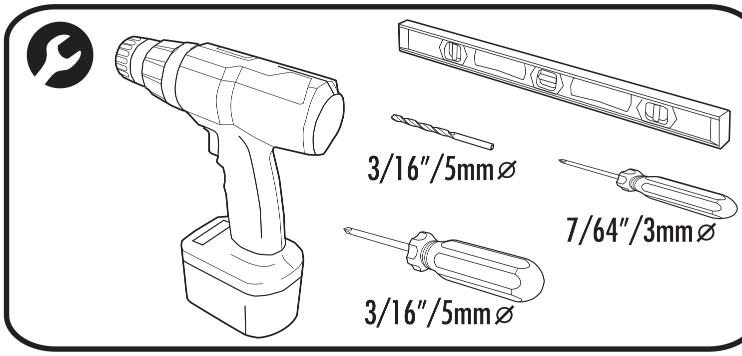

Wallmount Instructions for Phone

translated text | translated text | translated text | translated text | translated text | translated text | translated text | translated text | translated text translated text | translated text | translated text | translated text | translated text | translated text | translated text | translated text | translated text | translated text | translated text | translated text | translated text | translated text | translated text | translated text | translated text | translated text | translated text | translated text | translated text | translated text | translated text | translated text | translated text

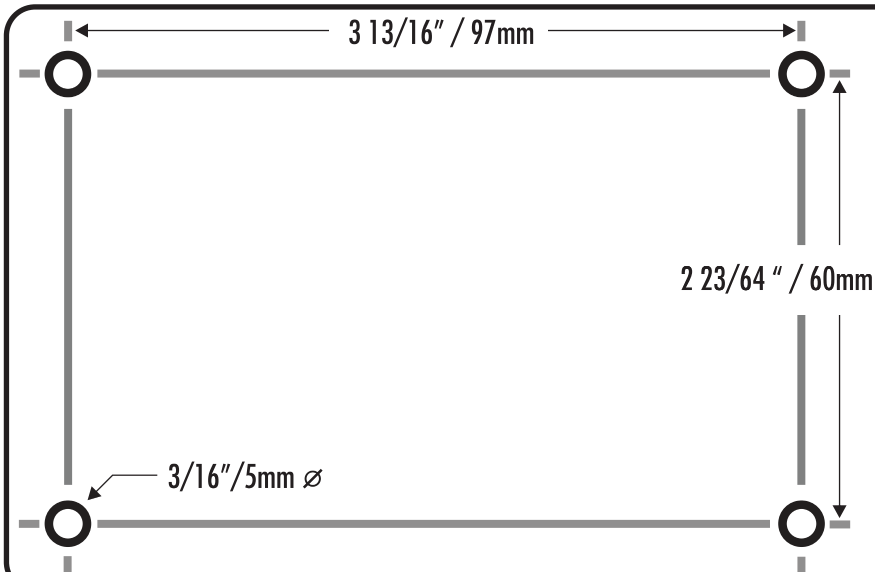

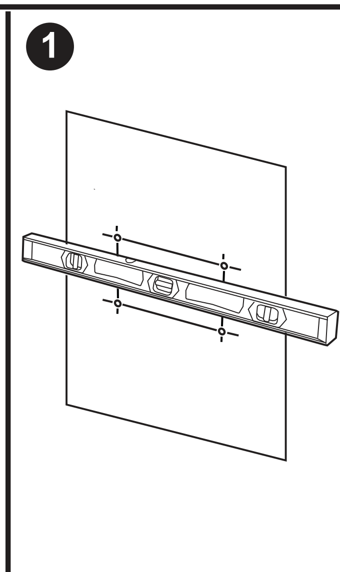

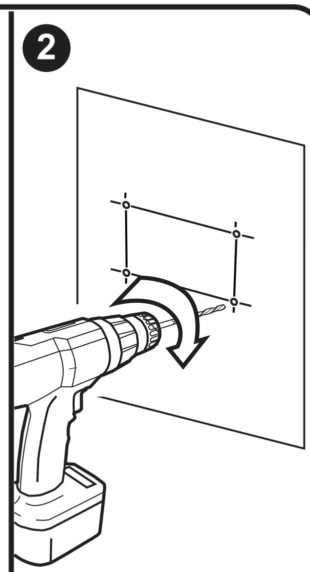

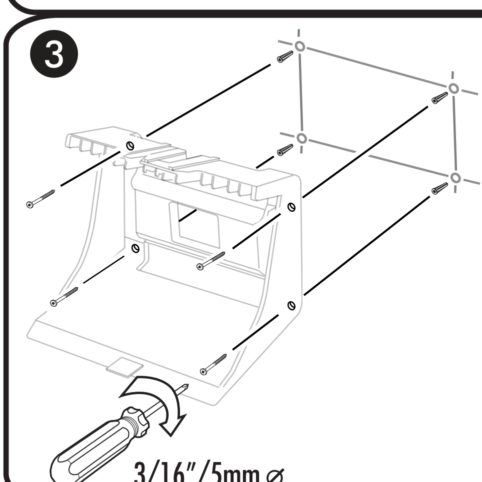

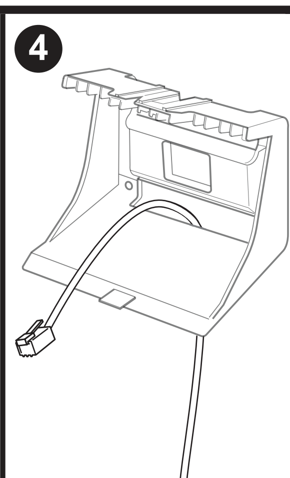

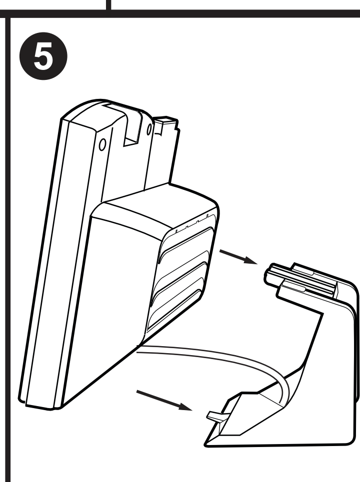

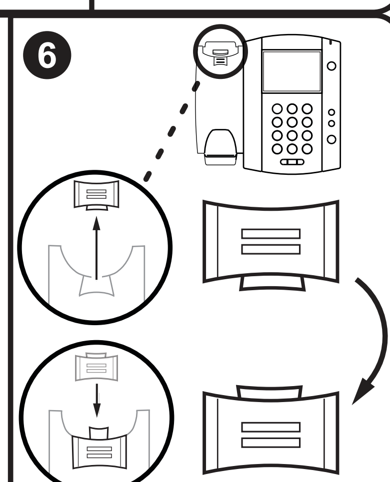

Wallmount Instructions for Expansion Module

translated text | translated text | translated text | translated text | translated text | translated text | translated text | translated text | translated text translated text | translated text | translated text | translated text | translated text | translated text | translated text | translated text | translated text | translated text | translated text | translated text | translated text | translated text | translated text | translated text | translated text | translated text | translated text | translated text | translated text | translated text | translated text | translated text | translated text | translated text | translated text

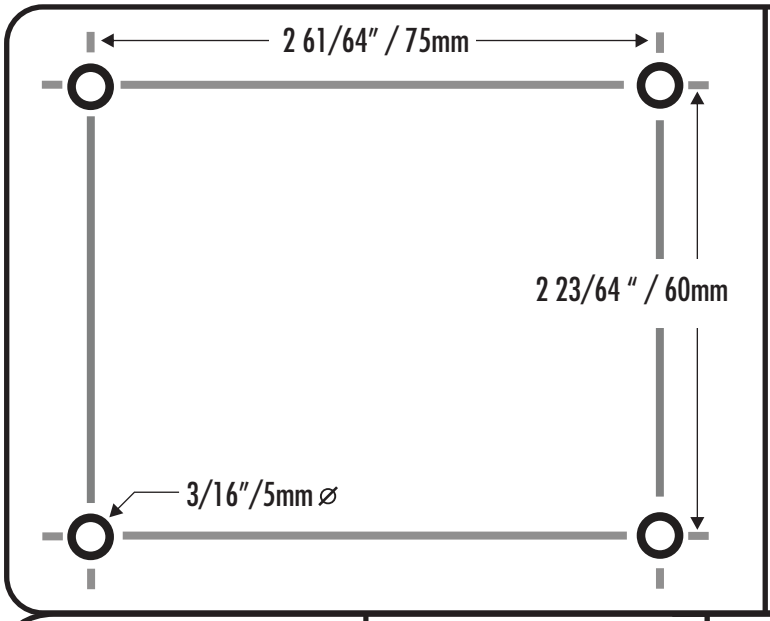

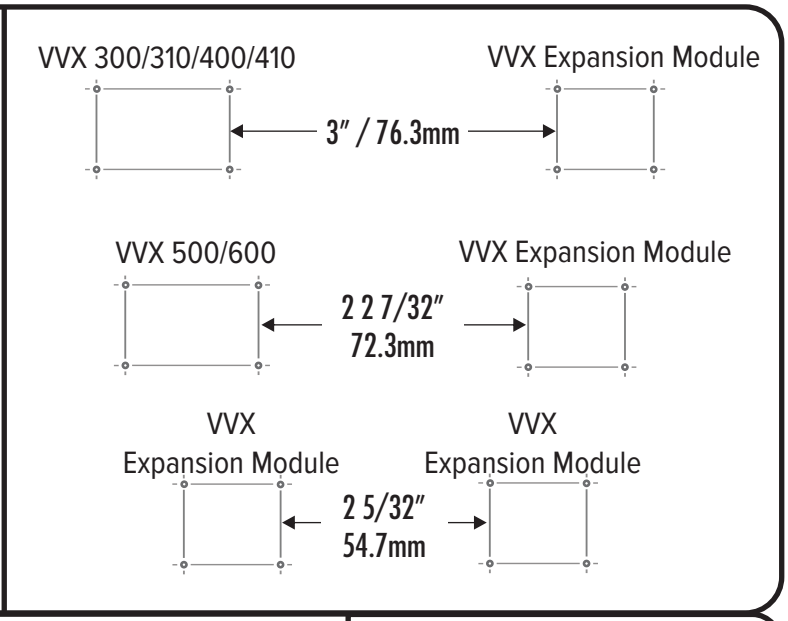

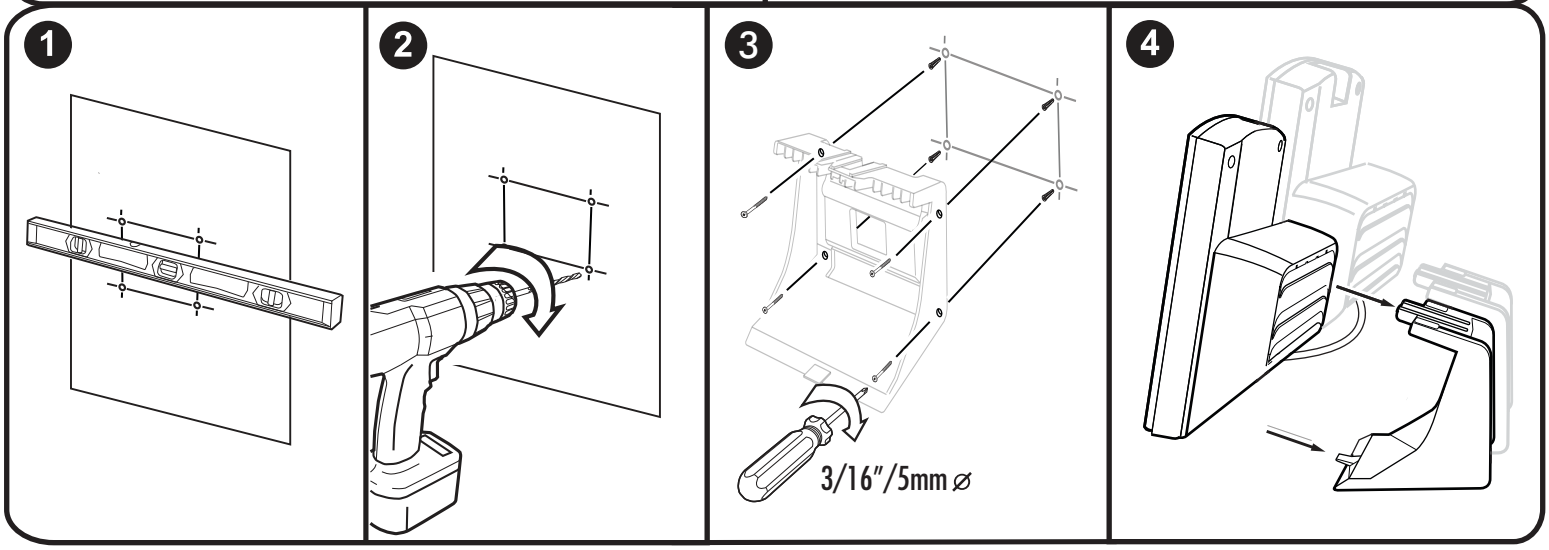

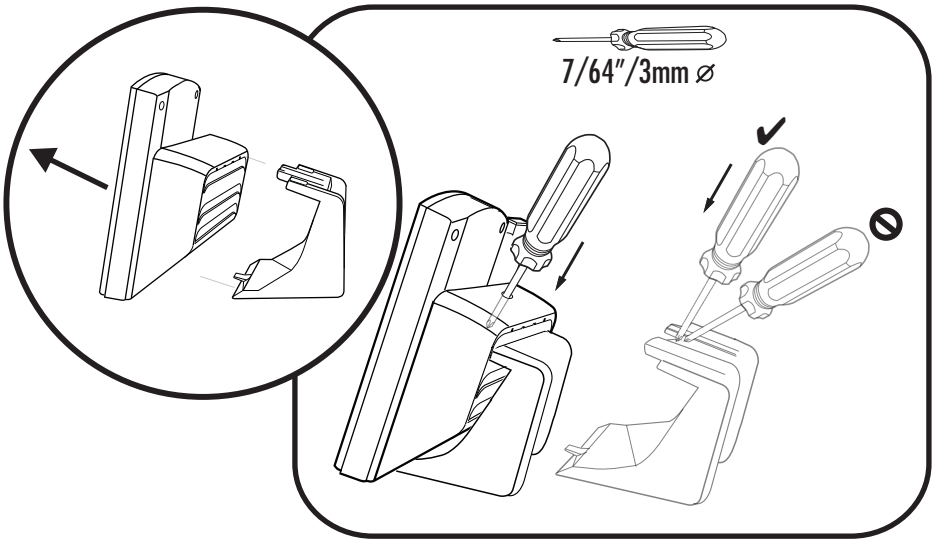

Removing Phone or Expansion Module

translated text
translated text
translated text
translated text
translated text
translated text
translated text
translated text
translated text